Asiaexloader

Smooth the way with Asiaexloader

AsiaexLoader sales and supply team

Welcome to AsiaexLoader, a leader in the export and supply of construction machinery parts. With several years of experience in providing high-quality parts and exceptional services, we are recognized as a trusted partner for construction and road-building projects on a global scale.

Our goal is to offer machinery parts that are carefully selected and meet the highest international standards. Here, we will introduce a selection of our products, including:

Gearboxes
Axles
Hydraulic components
Electrical components
Side and body parts

AXL
ASIA EXLOADER

These products enable you to advance your projects with confidence and high efficiency.

By utilizing cutting-edge technology and a team of experts, we assure you that every part you receive from us is unmatched in quality and durability. We proudly present AsiaexLoader as your first choice in construction machinery parts.

Contact us

Export : Mr.Majid Heydari
Phone : +989123588602
Linkedin

www.asiaexloader.com

Conclusion

At AsiaexLoader, we are committed to providing the best services and products of the highest quality. Our experience and expertise in the construction machinery parts industry make us a reliable partner for you.

We invite you to contact our team and benefit from our specialized services and consultations. We]will be happy to answer your questions and address the specific needs of your projects.

For more information and to receive consultation, please get in touch with us. We are always ready to assist you with suitable solutions to achieve your goals.

Thank you for choosing AsiaexLoader and placing your trust in us. We hope our collaboration leads to even greater successes.

Contact us
Export : Mr.Majid Heydari
Phone : +989123588602
Linkedin

www.asiaexloader.com

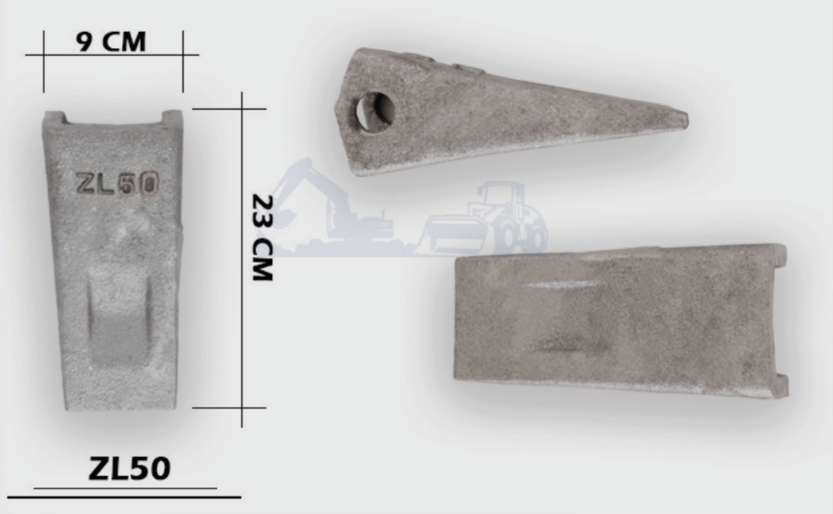

Asiaexloader

Product specifications

Name	Bucket Tooth-Loader
Part Nnmber	zL 50
Net Weight	5.700 Kg
Length	23 Cm
Width	9 Cm

www.asiaexloader.com

Contact us
Export : Mr.Majid Heydari
Phone : +989123588602
Linkedin

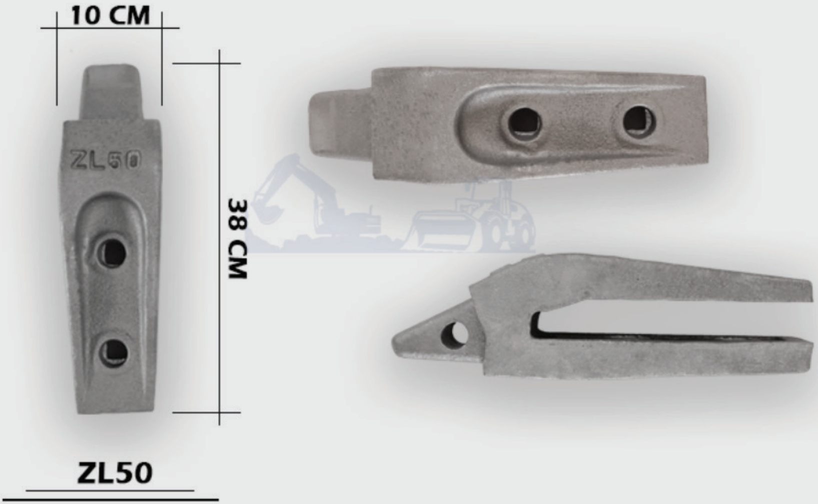

Asiaexloader

Product specifications

Name	Bucket Adaptor-Loader
Part Nnmber	ZL 50
Net Weight	12 Kg
Length	38 Cm
Width	10 Cm

www.asiaexloader.com

Contact us

Export : Mr.Majid Heydari

Phone : +989123588602

Linkedin

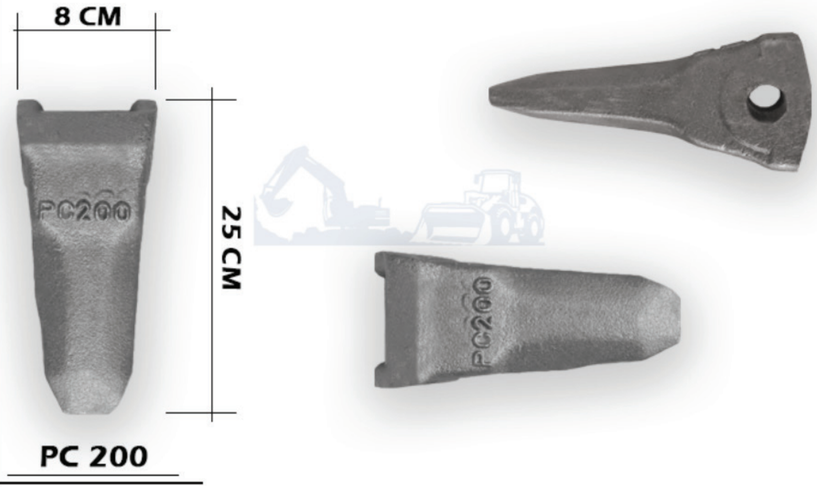

Asiaexloader

Product specifications

Name	Bucket Tooth-Excavator
Part Nnmber	pc 200
Net Weight	6.600 Kg
Length	25 Cm
Width	8 Cm

www.asiaexloader.com

Contact us

Export : Mr.Majid Heydari

Phone : +989123588602

Linkedin

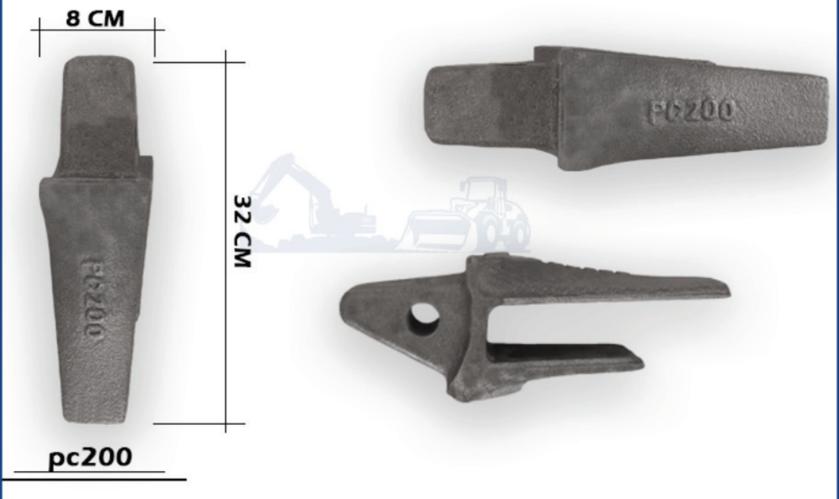

Asiaexloader

Product specifications

Name	Bucket Tooth-Excavator
Part Nnmber	pc 200
Net Weight	7.300 Kg
Length	32 Cm
Width	8 Cm

www.asiaexloader.com

Contact us

Export : Mr.Majid Heydari
Phone : +989123588602
Linkedin

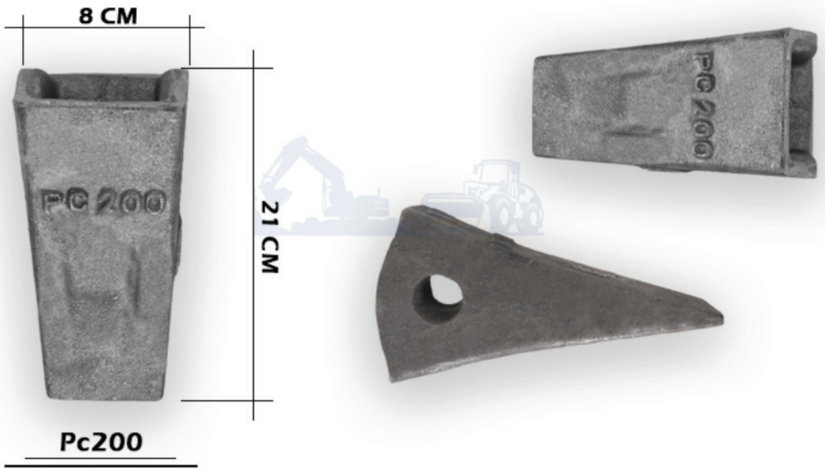

Asiaexloader

Product specifications

Name	Bucket Tooth-Excavator
Part Nnmber	pc 200
Net Weight	5.400 Kg
Length	21 Cm
Width	8 Cm

www.asiaexloader.com

Contact us

Export : Mr.Majid Heydari

Phone : +989123588602

Linkedin

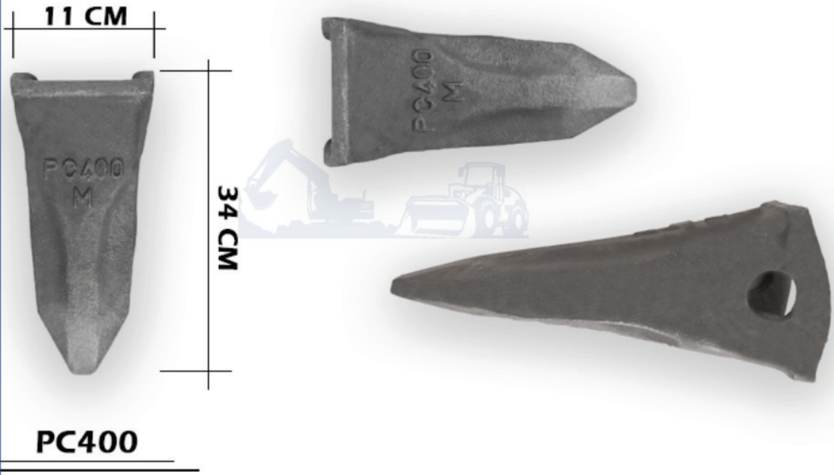

PC400

Asiaexloader

Product specifications

Name	Bucket Tooth-Loader
Part Nnmber	pc 400
Net Weight	14.900 Kg
Length	34 Cm
Width	11 Cm

www.asiaexloader.com

Contact us

Export : Mr.Majid Heydari
Phone : +989123588602
Linkedin

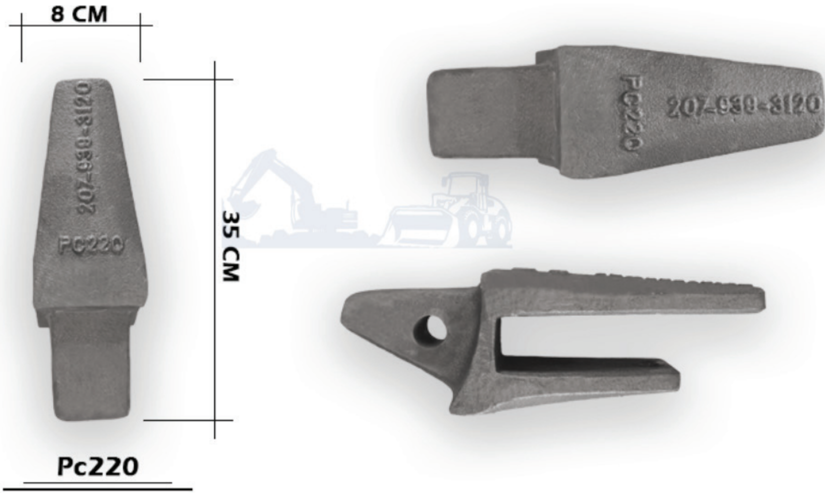

Asiaexloader

Product specifications

Name	Bucket Tooth-Excavator
Part Nnmber	pc 220
Net Weight	13.300 Kg
Length	35 Cm
Width	8 Cm

www.asiaexloader.com

Contact us

Export : Mr.Majid Heydari

Phone : +989123588602

Linkedin

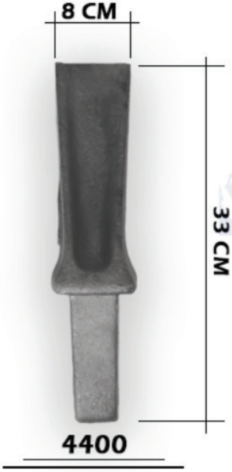

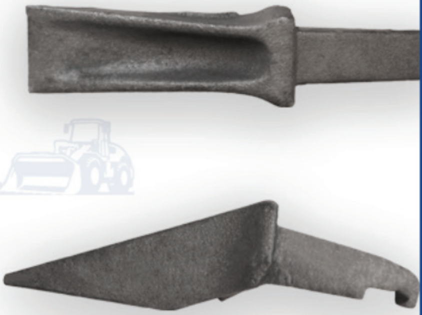

Asiaexloader

Product specifications

Name	Bucket Tooth-Loader
Part Nnmber	4400
Net Weight	9.400 Kg
Length	33 Cm
Width	8 Cm

www.asiaexloader.com

Contact us

Export : Mr.Majid Heydari

Phone : +989123588602

Linkedin

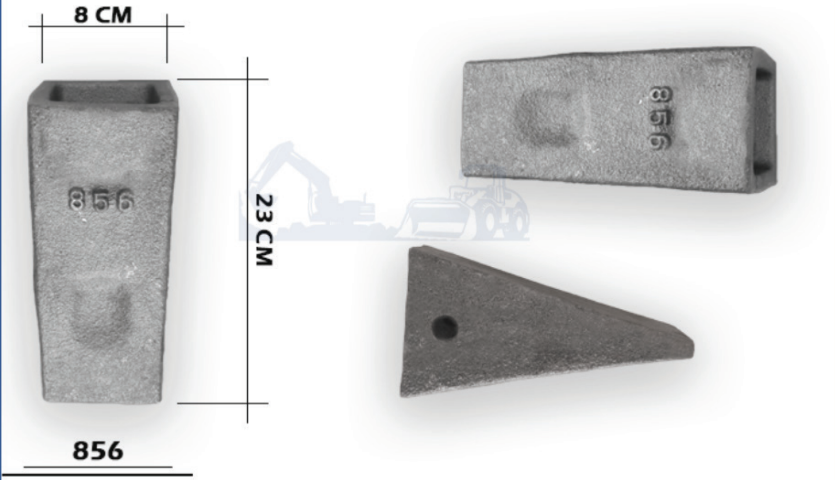

Asiaexloader

Product specifications

Name	Bucket Tooth-Loader
Part Nnmber	856
Net Weight	7.100 Kg
Length	23 Cm
Width	8 Cm

www.asiaexloader.com

Contact us

Export : Mr.Majid Heydari

Phone : +989123588602

Linkedin

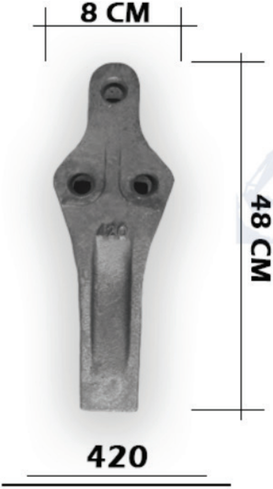

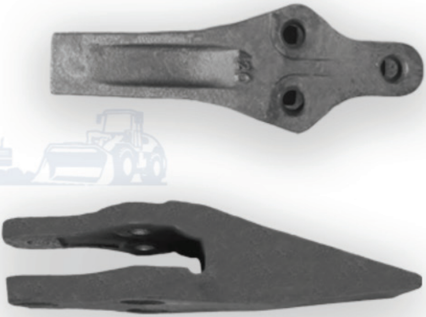

Asiaexloader

Product specifications

Name	Bucket Tooth-Excvator
Part Nnmber	420
Net Weight	18.500 Kg
Length	48 Cm
Width	8 Cm

www.asiaexloader.com

Contact us

Export : Mr.Majid Heydari

Phone : +989123588602

Linkedin

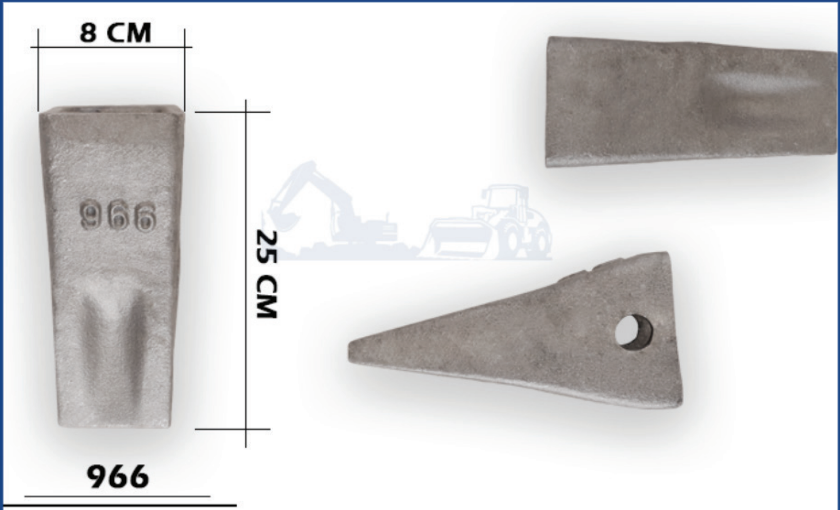

Asiaexloader

Product specifications

Name	Bucket Tooth-Loader
Part Nnmber	966
Net Weight	8.800 Kg
Length	25 Cm
Width	8 Cm

www.asiaexloader.com

Contact us
Export : Mr.Majid Heydari
Phone : +989123588602
Linkedin